CHAIN & DRIVES®

Leaf Chain

MEG

MECHANICAL EQUIPMENT GROUP®

CHAIN & DRIVES®
COMPLETE BEARINGS & POWER TRANSMISSION

Chain & Drives was established to become a leader in Power Transmission, our core sectors include the Drilling and Fork Lift industries.

We have vast experience in these industries and have been supplying high quality leaf chain manufactured from market leading brands such as Dongbo, D.I.D., Elite, IWIS, Sedis, TransDrive and Zexus.

Our Friendly trained team offer complimentary site visits to inspect and measure up your chain requirment. We are able to provide chain from stock or in specified continuous lengths requested by our customers.

Our team also offer on-site leaf chain analysis and reporting and can identify possible causes of failure and can assist in the selection of suitable chain and provide engineering data.

4 AL Series
5 BL/LH Series
8 LL/EL Series
10 FL Series
11 Galle Chain
12 Rollerless
13 Mast Guide Bearings
14 Chain Wear Gauges
15 Chain Lubrication
ChemTools Chain Lubricants
16 Common Chain Defects
17 TransDrive+ Heavy Duty Leaf Chain with Zintek®

CHEMTOOLS DONGBO CHAIN D.I.D® ELITE FB

Industry Sectors

We have many years of experience in all industry sectors across Australasia.

Our knowledge and specialised product development provides you with a level of service and proven results that you can rely on to achieve greater productivity and results.

Through developing these processes we have an improved understanding of your business and application requirements.

With high level partnership and understanding we offer solutions that are efficient, competitive and beneficial to businesses.

Our partnership with clients across these sectors allows us to share a wide range of knowledge gained from previous experiences.

Our sector services and knowledge includes Design, Supply, Installation and Maintenance services.

- Fork Lift
- Agriculture
- Building & Construction
- Conveyor Drives
- Drilling
- Mining & Heavy Industry

iwis sedis TRANSDRIVE® ZEXUS JAPAN INDUSTRIAL CHAINS

AL Series Leaf Chain

AL series (American Light) chain (manufactured to the ANSI B29.9 standard) is constructed from American standard roller chain components. AL series chain is lightweight chain used for light load lifting applications and machine tools. Plate configuration and thickness are the same as ANSI roller chain. Pin diameter is almost the same as ANSI roller chain.

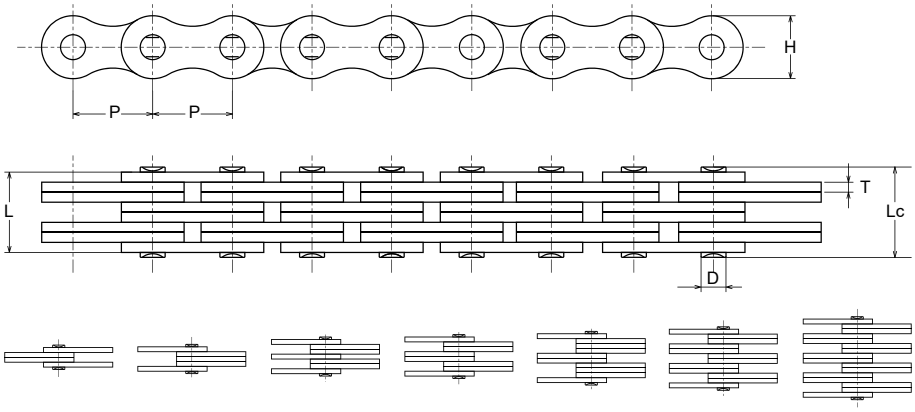

2x2 2x3 3x4 4x4 4x6 6x6 8x8

ANSI Chain No.	Pitch P mm	Lacing	Plate Depth h2 min mm	Plate Thickness T mm	Pin Diameter d2 max mm	Pin Length L max mm	Tensile Strength		Weight Per Metre q = kg/m
							Ultimate Q min mm	Average Q0 mm	
AL422	12.70	2 x 2	10.40	1.50	3.96	7.90	14.10	16.90	0.39
AL444		4 x 4				14.40	28.20	35.20	0.74
AL466		6 x 6				20.50	42.30	52.70	1.10
AL522	15.88	2 x 2	12.80	2.06	5.08	10.30	22.00	27.50	0.61
AL544		4 x 4				18.90	44.00	55.00	1.19
AL566		6 x 6				26.90	66.00	82.50	1.79
AL622	19.05	2 x 2	15.60	2.44	5.94	12.40	37.00	44.40	0.86
AL644		4 x 4				22.70	64.00	76.80	1.69
AL666		6 x 6				32.40	101.00	121.20	2.52
AL822	25.40	2 x 2	20.50	3.26	7.92	16.00	56.70	68.60	1.54
AL844		4 x 4				29.40	113.40	135.60	3.00
AL866		6 x 6				42.50	170.00	202.30	4.46
AL1022	31.75	2 x 2	25.60	4.00	9.53	19.60	88.50	107.10	2.37
AL1044		4 x 4				35.90	177.00	203.60	4.68
AL1066		6 x 6				52.30	265.00	315.80	7.00
AL1222	38.10	2 x 2	30.50	4.80	11.10	24.30	127.00	151.10	3.65
AL1244		4 x 4				43.80	254.00	299.70	7.05
AL1266		6 x 6				63.00	381.00	426.30	10.44
AL1422	44.45	2 x 2	36.40	5.65	12.70	28.07	151.23	182.37	4.79
AL1444		4 x 4				51.30	372.70	413.60	10.34
AL1466		6 x 6				74.56	559.00	620.40	15.16
AL1622	50.80	2 x 2	41.60	6.45	14.27	32.94	191.26	231.13	5.98
AL1644		4 x 4				58.06	471.00	522.80	12.98
AL1666		6 x 6				84.46	706.00	783.60	19.41

Every effort has been taken to ensure that the data listed in this catalogue is correct. Chain & Drives will not accept liability for any damage or loss caused as a result of the data in this catalogue.

BL/LH Series Leaf Chain

BL / LH Series (Leaf Heavy) leaf chains consist of link plates which are thicker and larger in contour than the AL Series link plates of the same pitch. The link plates have the same thickness as the link plates of the next larger pitch size in ANSI roller chains. The pins have the same diameter as those of ANSI roller chains of the next larger pitch.

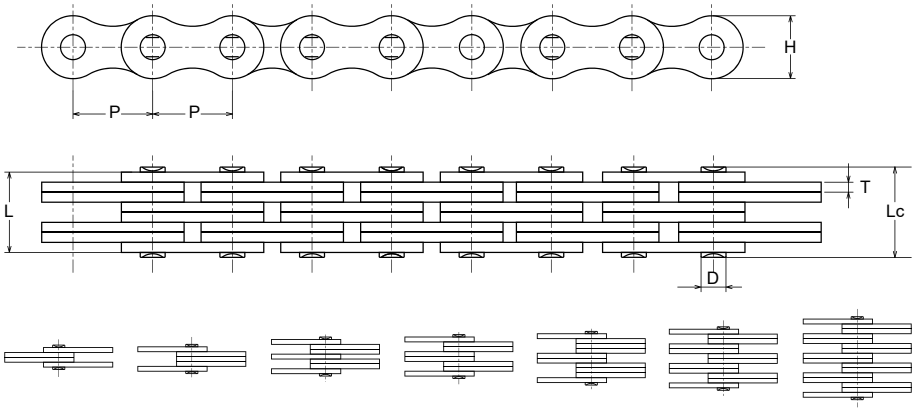

2x2 2x3 3x4 4x4 4x6 6x6 8x8

ANSI Chain No.	ISO Chain No.	Pitch P	Lacing	Plate Thickness		Pin Diameter D max	Pin Length		Ultimate Tensile Strength min kN	Average Tensile Strength kN	Weight Per Metre kg/m
				H max	T max		L max	Lc max			
LH0822	BL422		2X2				11.05	13.05	22.2	28.2	0.64
LH0823	BL423		2X3				13.16	15.16	22.2	28.2	0.80
LH0834	BL434		3X4				17.40	19.40	33.4	42.3	1.12
LH0844	BL444	12.7	4X4	12.07	2.08	5.09	19.51	21.51	44.5	58.0	1.28
LH0846	BL446		4X6				23.75	25.75	44.5	58.0	1.60
LH0866	BL466		6X6				27.99	29.99	66.7	82.6	1.92
LH0888	BL488		8X8				36.45	38.45	89.0	110.5	2.56
LH1022	BL522		2X2				12.90	15.40	33.4	45.2	0.88
LH1023	BL523		2X3				15.37	17.87	33.4	45.2	1.10
LH1034	BL534		3X4				20.32	22.82	48.9	66.8	1.50
LH1044	BL544	15.875	4X4	15.09	2.44	5.96	22.78	25.28	66.7	86.8	1.80
LH1046	BL546		4X6				27.74	30.24	66.7	86.5	2.20
LH1066	BL566		6X6				32.69	35.19	100.1	125.5	2.65
LH1088	BL588		8X8				42.57	45.07	133.4	170.5	3.50
LH1222	BL622		2X2				17.37	20.37	48.9	65.8	1.45
LH1223	BL623		2X3				20.73	23.73	48.9	65.8	1.80
LH1234	BL634		3X4				27.43	30.43	75.6	100.0	2.50
LH1244	BL644	19.05	4X4	18.11	3.3	7.94	30.78	33.78	97.9	122.6	2.90
LH1246	BL646		4X6				37.49	40.49	97.9	122.6	3.60
LH1266	BL666		6X6				44.20	47.20	146.8	195.3	4.30
LH1288	BL688		8X8				57.61	60.61	195.7	240.8	5.80

LH0822/BL422 - LH1288/BL688 Size Chart (mm).

Every effort has been taken to ensure that the data listed in this catalogue is correct. Chain & Drives will not accept liability for any damage or loss caused as a result of the data in this catalogue.

BL/LH Series Leaf Chain

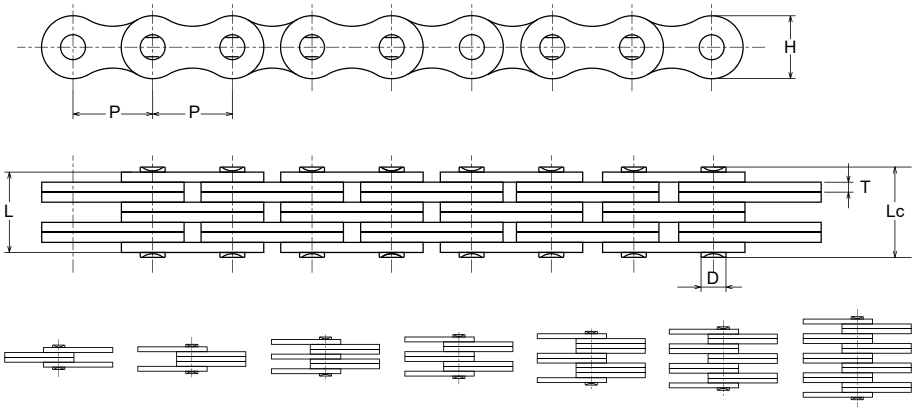

2x2 2x3 3x4 4x4 4x6 6x6 8x8

ANSI Chain No.	ISO Chain No.	Pitch P	Lancing	Plate Thickness H max	Plate Thickness T max	Pin Diameter D max	Pin Length L max	Pin Length Lc max	Ultimate Tensile Strength min kN	Average Tensile Strength kN	Weight Per Metre kg/m
LH1622	BL822		2X2				21.34	24.84	84.5	110.5	2.20
LH1623	BL823		2X3				25.48	28.98	84.5	110.5	2.70
LH1634	BL834		3X4				33.76	37.26	129.0	175.8	3.80
LH1644	BL844	25.4	4X4	24.13	4.09	9.54	37.90	41.40	169.0	220.2	4.30
LH1646	BL846		4X6				46.10	49.68	169.0	220.2	5.40
LH1666	BL866		6X6				54.45	57.96	253.6	326.8	6.50
LH1688	BL888		8X8				71.02	74.52	338.1	438.1	8.60
LH2022	BL1022		2X2				25.37	29.37	115.6	152.0	3.4
LH2023	BL1023		2X3				30.33	34.33	115.6	152.0	4.3
LH2034	BL1034		3X4				40.23	44.23	182.4	235.2	6.0
LH2044	BL1044	31.75	4X4	30.48	4.90	11.11	45.19	49.19	231.3	290.8	6.9
LH2046	BL1046		4X6				55.09	59.09	231.3	290.8	8.6
LH2066	BL1066		6X6				65.00	69.00	347.0	428.6	10.3
LH2088	BL1088		8X8				84.81	88.81	462.6	503.3	13.8
LH2422	BL1222		2X2				29.62	34.12	151.2	193.8	4.6
LH2423	BL1223		2X3				35.43	39.93	151.2	193.8	5.8
LH2434	BL1234		3X4				47.07	51.57	244.6	316.0	8.1
LH2444	BL1244	38.10	4X4	36.55	5.77	12.71	52.88	57.38	302.5	383.0	9.3
LH2446	BL1246		4X6				64.52	69.02	302.5	383.0	11.6
LH2466	BL1266		6X6				76.15	80.65	453.7	545.6	13.9
LH2488	BL1288		8X8				99.42	103.92	605.0	728.0	18.6

LH1622/BL822 - LH2488/BL1288 Size Chart (mm).

Every effort has been taken to ensure that the data listed in this catalogue is correct. Chain & Drives will not accept liability for any damage or loss caused as a result of the data in this catalogue.

BL/LH Series Leaf Chain

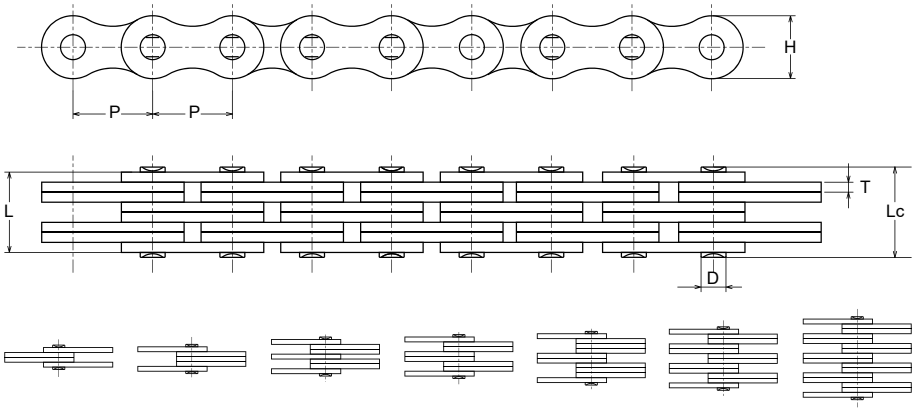

2x2 2x3 3x4 4x4 4x6 6x6 8x8

ANSI Chain No.	ISO Chain No.	Pitch P	Lancing	Plate Thickness H max	Plate Thickness T max	Pin Diameter D max	Pin Length L max	Pin Length Lc max	Ultimate Tensile Strength min kN	Average Tensile Strength kN	Weight Per Metre kg/m
LH2822	BL1422		2X2				33.55	38.55	191.3	226.6	6.1
LH2823	BL1423		2X3				40.16	45.16	191.3	226.6	7.6
LH2834	BL1434		3X4				53.37	58.37	315.8	375.5	10.6
LH2844	BL1444	44.45	4X4	42.74	6.55	14.29	59.97	64.97	382.6	453.3	12.2
LH2846	BL1446		4X6				73.18	78.18	382.6	453.3	15.2
LH2866	BL1466		6X6				86.39	91.39	578.3	680.8	18.2
LH2888	BL1488		8X8				112.8	117.8	765.1	900.8	24.3
LH3222	BL1622		2X2				39.01	45.01	289.1	343.6	8.0
LH3223	BL1623		2X3				46.58	52.58	289.1	343.6	10.0
LH3234	BL1634		3X4				61.72	67.72	440.4	520.8	14.0
LH3244	BL1644	50.8	4X4	48.74	7.52	17.46	69.29	75.29	578.3	682.3	16.0
LH3246	BL1646		4X6				84.43	90.43	578.3	682.3	20.0
LH3266	BL1666		6X6				99.57	105.57	857.4	988.6	24.0
LH3288	BL1688		8X8				129.84	135.84	1156.5	1366.5	32.0
LH4022	BL2022		2X2				51.74	60.0	433.7	520.0	15.9
LH4023	BL2023		2X3				61.70	69.7	433.7	520.0	20.0
LH4034	BL2034		3X4				81.61	89.61	649.4	780.0	27.8
LH4044	BL2044	63.5	4X4	60.33	9.91	23.81	91.57	99.57	867.4	1040.5	31.8
LH4046	BL2046		4X6				111.48	119.5	867.4	1040.5	40.0
LH4066	BL2066		6X6				131.40	139.4	1301.1	1560.0	47.5
LH4088	BL2088		8X8				171.22	179.22	1734.8	2080.5	63.5

LH2822/BL1422 - LH4088/BL2088 Size Chart (mm).

Every effort has been taken to ensure that the data listed in this catalogue is correct. Chain & Drives will not accept liability for any damage or loss caused as a result of the data in this catalogue.

LL/EL Series Leaf Chain

LL / EL series (European Light – Leaf Light) chain, manufactured according to ISO4347, DIN8152 and NFE26107, is constructed from roller chain components to European standard. Like AL series chain, EL-LL series chain is a lightweight chain used for light load lifting applications and machine tools.

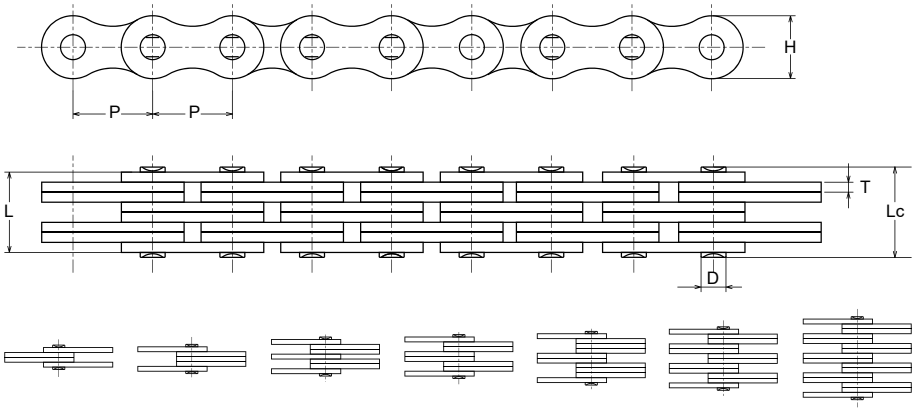

2x2 2x3 3x4 4x4 4x6 6x6 8x8

ISO/DIN Chain No.	ANSI Chain No.	Pitch P	Lancing	Plate Thickness H max	Plate Thickness T max	Pin Diameter D max	Pin Length L max	Pin Length Lc max	Ultimate Tensile Strength min kN	Average Tensile Strength kN	Weight Per Metre kg/m
LL0822	EL0422	12.7	2X2	10.60	1.30	4.45	7.6	9.6	17.8	21.5	0.40
LL0844	EL0444		4X4				13.0	15.0	31.1	36.2	0.80
LL0866	EL0466		6X6				18.2	20.2	44.5	51.2	1.20
LL0888	EL0488		8X8				23.5	25.5	62.2	72.6	1.35
LL1022	EL0522	15.875	2X2	13.70	1.60	5.08	9.2	11.2	22.3	25.6	0.50
LL1044	EL0544		4X4				15.8	17.8	44.5	53.2	1.00
LL1066	EL0566		6X6				22.1	24.1	66.7	78.3	1.50
LL1088	EL0588		8X8				28.8	30.8	89.0	100.3	2.20
LL1222	EL0622	19.05	2X2	16.00	1.85	5.72	10.4	12.9	28.9	35.2	0.70
LL1244	EL0644		4X4				17.9	20.4	57.8	68.0	1.30
LL1266	EL0666		6X6				25.4	27.9	86.7	98.3	2.00
LL1288	EL0688		8X8				32.9	35.4	115.6	135.0	2.88
LL1622	EL0822	25.4	2X2	21.00	3.10	8.28	17.2	20.2	58.0	68.0	1.50
LL1644	EL0844		4X4				29.6	32.6	144.0	166.3	3.00
LL1666	EL0866		6X6				42.4	45.4	200.0	232.8	4.40
LL1688	EL0888		8X8				55.4	58.4	288.0	333.3	5.80
LL2022	EL1022	31.75	2X2	26.40	3.70	10.19	20..1	23.6	95.0	110.8	2.30
LL2044	EL1044		4X4				33.8	37.3	95.0	220.5	4.40
LL2066	EL1066		6X6				50.1	53.6	285.0	325.6	6.60
LL2088	EL1088		8X8				65.4	68.9	380.0	436.2	8.80

LL0822/EL0422 - LL2088/EL1088 Size Chart (mm).

Every effort has been taken to ensure that the data listed in this catalogue is correct. Chain & Drives will not accept liability for any damage or loss caused as a result of the data in this catalogue.

LL/EL Series Leaf Chain

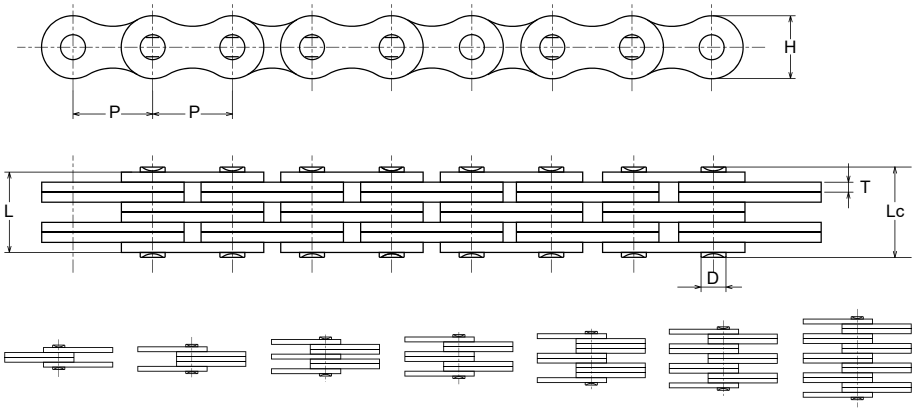

2x2 2x3 3x4 4x4 4x6 6x6 8x8

ISO/DIN Chain No.	ANSI Chain No.	Pitch P	Lancing	Plate Thickness H max	Plate Thickness T max	Pin Diameter D max	Pin Length L max	Pin Length Lc max	Ultimate Tensile Strength min kN	Average Tensile Strength kN	Weight Per Metre kg/m
LL2422	EL1222	38.1	2X2	33.40	5.00	14.63	28.4	33.4	170.0	196.3	4.40
LL2444	EL1244		4X4				46.3	51.3	340.0	380.5	8.50
LL2466	EL1266		6X6				66.4	71.4	510.0	576.8	12.50
LL2488	EL1288		8X8				86.6	91.6	680.0	776.2	17.00
LL2822	EL1422	44.45	2X2	37.08	6.00	15.90	32.2	37.7	200.0	226.2	5.40
LL2844	EL1444		4X4				56.4	61.9	400.0	448.1	10.50
LL2866	EL1466		6X6				80.6	86.1	600.0	675.8	15.50
LL2888	EL1488		8X8				105.2	110.7	800.0	893.8	20.00
LL3222	EL1622	50.8	2X2	42.00	6.00	17.81	33.2	39.2	260.0	298.2	6.20
LL3244	EL1644		4X4				57.4	63.4	520.0	582.5	12.10
LL3266	EL1666		6X6				81.6	87.6	780.0	875.5	18.00
LL3288	EL1688		8X8				105.0	110.0	360.0	432.0	10.33
LL4022	EL2022	63.5	2X2	52.76	8.00	22.89	42.2	48.2	360.0	432.0	10.33
LL4044	EL2044		4X4				74.4	80.4	780.0	936.0	20.03
LL4066	EL2066		6X6				106.6	112.6	1080.0	1300.0	30.05
LL4088	EL2088		8X8				140.0	146.0	1440.0	1730.0	39.13
LL4822	EL2422	76.20	2X2	63.88	10.00	29.24	54.6	64.6	560.0	670.0	18.52
LL4844	EL2444		4X4				92.6	102.6	1120.0	1344.0	35.73
LL4866	EL2466		6X6				133.4	143.4	1680.0	2016.0	53.05
LL4888	EL2488		8X8				174.2	184.2	2240.0	2688.0	70.44

LL2422/EL1222 - LL4888/EL2488 Size Chart (mm).

Every effort has been taken to ensure that the data listed in this catalogue is correct. Chain & Drives will not accept liability for any damage or loss caused as a result of the data in this catalogue.

FL Series Leaf Chain

An earlier style and less commonly used leaf chain. The FL / FLC leaf chain is a light duty that uses single interlacing. It is most commonly used in the UK and to a lesser extent in Europe.

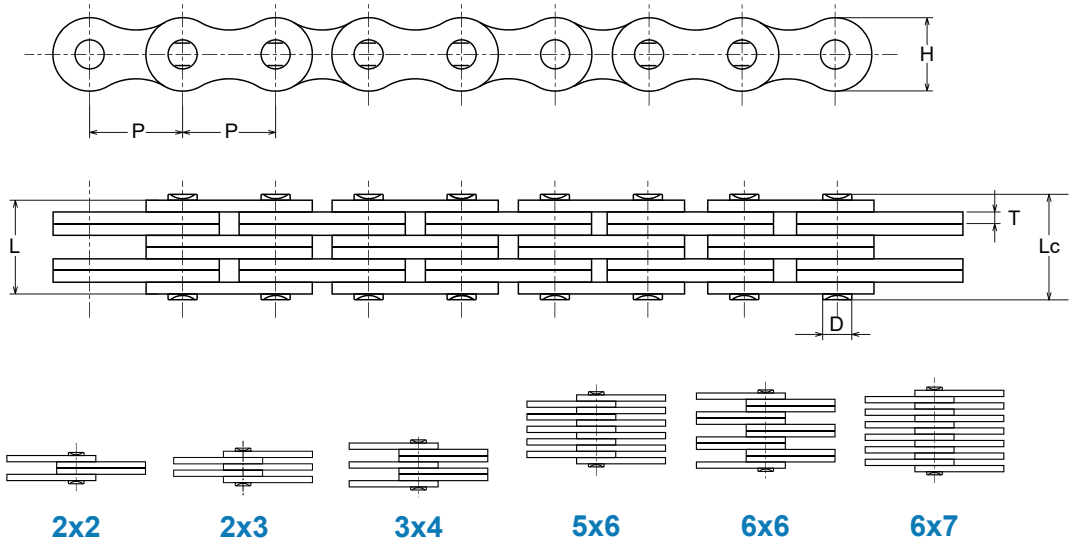

Chain No.	Pitch P mm	Lancing	Plate Depth h2 max mm	Plate Thickness T max mm	Pin Diameter d2 max mm	Pin Length L max mm	Ultimate Tensile Strength Q min kN/LB	Average Tensile Strength Q0 kN mm	Weight Per Metre q kg/m
FL644	5.940	4X4	4.7	0.60	1.85	6.6	6.5/1477	7.8	0.40
FL666		6X6				9.3	9.75/2216	11.8	0.80
FL688		8X8				12.0	13.0/2955	15.6	1.20
FL523	8.000	2X3	6.3	1.00	2.31	6.7	7 .00/1575	7.4	0.50
FL844		4X4	6.9	0.73		7.9	10.0/2273	12.1	1.00
FL944	9.525	4X4	8.7	1.04	3.28	10.4	21.0/4724	24.7	0.43
FL945		4X5				11.5	21.00/4724	23.0	0.50
FL966		6X6				14.9	31.0/7045	36.8	0.65
FL988		8X8				19.0	42.00/9450	46.2	0.87
FL1222	12.700	2X2	8.2	1.00	3.58	7.0	11.43/2598	13.6	0.19
FL1223		2X3	10.2	2.03	4.45	12.8	20.0/4545	23.8	0.61
FL1244		4X4	10.2	1.70	4.45	16.7	44.0/10000	52.3	0.83
FLC534	15.875	3X4	12.7	1.85	5.08	15.3	40.4/9181	44.4	0.99
FLC545		4X5				19.2	51.3/12340	59.7	1.27
FLC556		5X6				22.7	67.6/15363	74.3	1.54
FLC567		6X8				26.8	80.80/18176	89.0	1.82
FLC578		7X8				30.8	90.00/20250	99.0	2.10

Every effort has been taken to ensure that the data listed in this catalogue is correct. Chain & Drives will not accept liability for any damage or loss caused as a result of the data in this catalogue.

Galle Chain

Named after their inventor André Galle, the Galle chain is the simplest type of steel link chain. They are used for industrial applications where it is necessary transmit high tensile force with a small circumferential velocity such as hoisting and lifting.

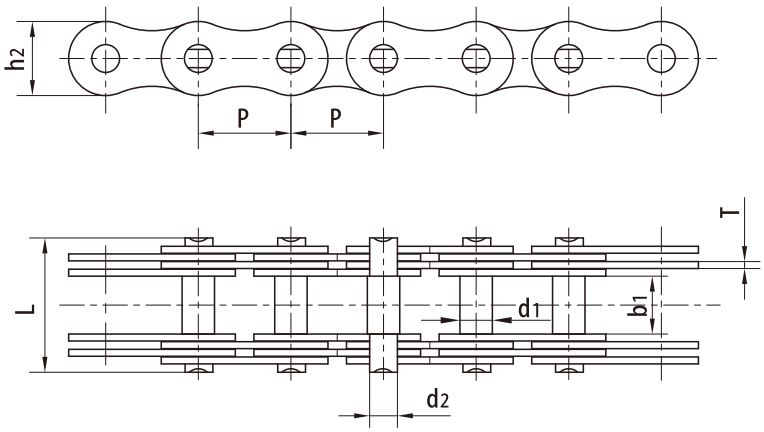

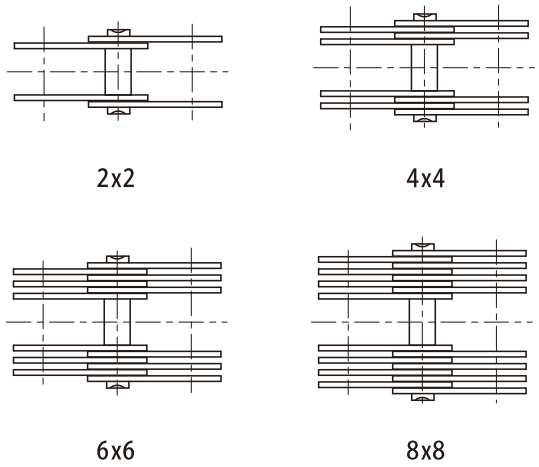

Chain No.	Pitch P mm	Width Between Inner Plates b1 min mm	Lancing	Pin Diameter d1 max mm	Pin Diameter d2 max mm	Pin Length L max mm	Plate Depth h2 max mm	Plate Thickness T max mm	Ultimate Tensile Strength Q min kN/LB	Weight Per Metre q kg/m
MP15	15	12	2X2	5	4	28.2	12	2.03	5.0/1125	0.7
MP20	20	15	2X2	8	6	32.0	15	2.03	12.5/2812	1.1
MP25	25	18	2X2	10	8	41.3	18	3.00	25.0/5624	1.8
MP30	30	20	4X4	11	9	57.0	20	3.00	40.0/8999	3.4
MP35	35	22	4X4	12	10	60.0	26	3.00	60.0/13498	4.5
MP40	40	25	4X4	14	12	62.0	32	3.00	80.0/17998	5.0
MP45	45	30	4X4	17	14	72.3	35	3.00	100.0/22497	7.0
MP50	50	35	4X4	22	18	102.0	40	4.50	150. 0/337 46	11.3
MP55	55	40	4X4	24	21	122.0	42	6.00	200.0/44994	14.5
MP60	60	45	4X4	26	23	129.3	46	6.00	250.0/56243	17.1
MP70	70	50	6X6	32	28	166.6	55	6.00	375.0/84364	34.0
MP80	80	60	6X6	36	32	180.0	60	6.00	500.0/112486	39.0
MP90	90	70	6X6	40	36	208.0	70	7.00	750.0/168728	53.0
MP100	100	80	8X8	45	40	250.6	80	7.00	1000.0/224972	77.0
MP110	110	90	8X8	50	45	266.0	90	7.00	1250.0/281215	90.0
MP120	120	100	8X8	55	50	295.3	100	8.00	1500.0/337 458	112.0

Every effort has been taken to ensure that the data listed in this catalogue is correct. Chain & Drives will not accept liability for any damage or loss caused as a result of the data in this catalogue.

Rollerless Leaf Chain

The rollerless design allows for smaller designs such as 4mm or ANSI 1/4-inch pitch.
The rollerless chain is generally used for light loads or those requiring only a direct pull.

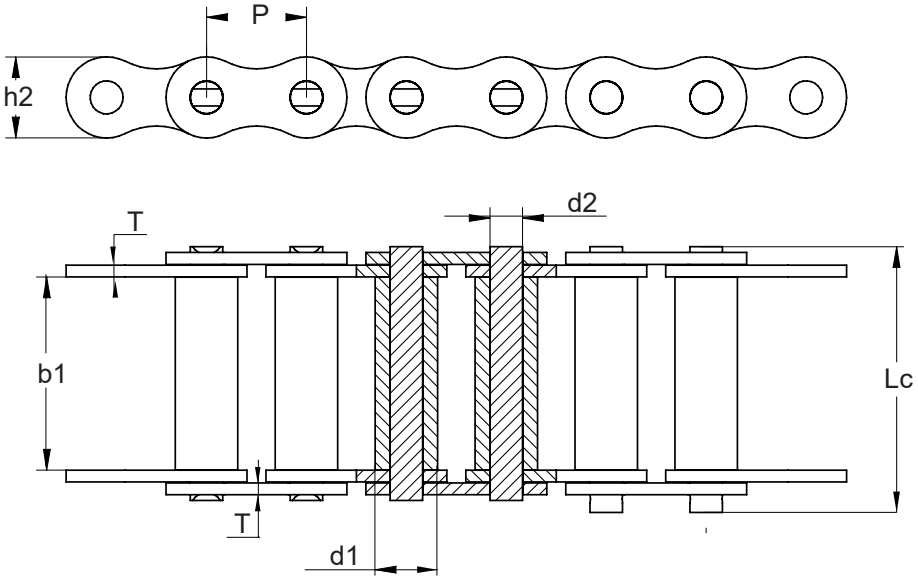

Chain No.	Pitch P mm	Bush Diameter d1 max mm	Width Between Inner Plates b1 max mm	Pin Diameter d2 max mm	Pin Length		Inner Plate Depth h2 max mm	Plate Thickness T max mm	Ultimate Tensile Strength Q min kN	Average Tensile Strength Q0 kN mm	Weight Per Metre q kg/m
					L max mm	Lc max mm					
45-1	12.700	5.63	7.85	3.96	16.60	17.80	12.00	1.50	14.1	17.5	0.54
55-1	15.875	7.03	9.40	5.08	20.70	22.20	15.09	2.03	22.2	29.4	0.83
65-1	19.050	8.33	12.57	5.94	25.90	27.70	18.00	2.42	31.80	41.5	1.22
85-1	25.400	11.10	15.75	7.92	32.70	35.00	24.00	3.25	56.7	69.4	2.16
105-1	31.750	13.60	18.90	9.53	40.40	44.70	30.00	4.00	88.5	109.2	3.31
125-1	38.100	15.60	25.22	11.10	50.30	54.30	35. 70	4.80	127.0	156.3	4.97
145-1	44.450	18.00	25.22	12.70	54.40	59.00	41.00	5.60	172.4	212.0	6.50
165-1	50.800	20.00	31.55	14.27	64.80	69.60	47.80	6.40	226.8	278.9	8.70

Every effort has been taken to ensure that the data listed in this catalogue is correct. Chain & Drives will not accept liability for any damage or loss caused as a result of the data in this catalogue.

Mast Guide Bearings

Mast Guide Bearings are heavy-duty bearings designed to guide and support forklift masts, providing smooth, stable movement under demanding loads and operating conditions.

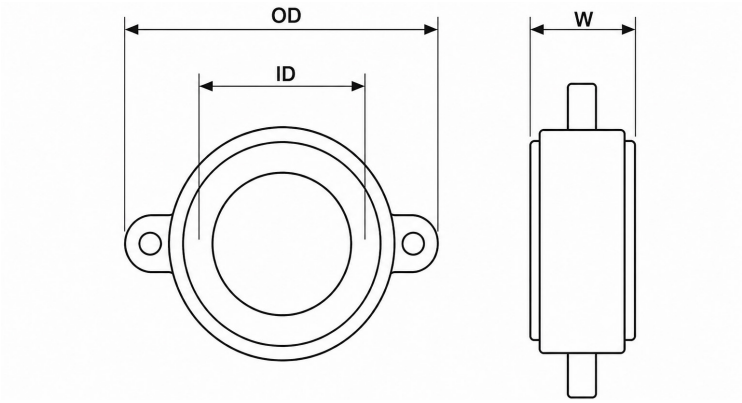

Part No.	OE Part No.	Fork Lift Brand	Dimensions		
			ID	OD	W
MG-B25-166	34A-72-11142	Komatsu	25	67	26
MG305SZZ-3		Crown	25	76.2	25.5/17
MG-DRG1703	22578-22401	TCM	25	80	22
MG-A3187	22198-22341	TCM	30	91.5	24
MG-E83528	59117-01H00	Nissan	35	94	28
MG-A166563	61236-10480-71	Toyota	35	94.5	28
MG-A30447	59117-L1400	Nissan	35	97	28
MG-A83528	34A-72-11770	Komatsu	35	98	28
MG307SZZ-14		Crown	35	101.3	28.4/21
MG-35X102X28/21	59117-10H00	Nissan	35	102	28
MG-A93129	38B-9AA-1120	Komatsu	35	108.5	31
MG-A36637	94110-01100	Mitsubishi	40	99	30
MG-B36637	94110-01200	Mitsubishi	40	100	30
MG-83522	61236-20540-71	Toyota	40	109.7	32
MG-40X110X32	61246-34241-71	Toyota	40	110	32
MG-40X1102X32	63368-30800-71	Toyota	40	110.2	32
MG-A32175	37B-9AA-2121	Komatsu	40	115.5	32
MG-SKB8T	37B-9AA-1521	Komatsu	40	118.2	32
MG-TVH3255136	37B-9AA-2521	Komatsu	40	118.5	33
MG-A617734	61236-23601-71	Toyota	40	119.5	28
MG-A83531	59117-20H11	Nissan	40	123.5	32
MG-A3635	94210-00600	Mitsubishi	45	114	35
MG-45X115X35/25	59117-L1200 94210-00100	Nissan Mitsubishi	45	115	35
MG-45MGT1215M	23458-22109	TCM	45	120	29
MG-D93129	37B-9AA-1311	Komatsu	45	121	36
MG-45X1235X34	59117-C1210	Nissan	45	123.5	34
MG309SZZ-4		Crown	45	127	31.7/25

Every effort has been taken to ensure that the data listed in this catalogue is correct. Chain & Drives will not accept liability for any damage or loss caused as a result of the data in this catalogue.

TransDrive Chain Wear Gauge

TransDrive Chain Wear Gauges provide a fast and accurate way to check chain pitch elongation, helping identify wear before it leads to premature failure. They make it easy to determine when a chain has reached its wear limit and requires replacement, supporting reliable operation and reduced maintenance downtime.

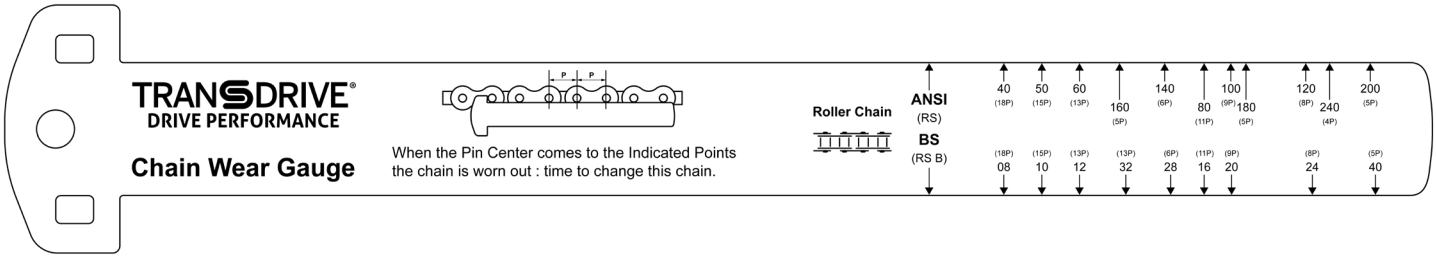

ANSI		BS	LEAF	Ref. pitch
RS 40		RS08B	400	18P
RS 50		RS10B	500	15P
RS 60		RS12B	600	13P
RS 80	RF2040	RS16B	800	11P
RS 100	RF2050	RS20B	1000	9P
RS 120	RF2060	RS24B	1200	8P
RS 140		RS28B	1400	6P
RS 160	RF2080	RS32B	1600	5P
RS 180				5P
RS 200	RF2100	RS40B		5P
RS 240	RF2120			4P

FB Professional Chain Wear Gauge

FB Gauge

The FB Chain Wear Gauge measures chain wear in 0.25% increments from 0–4%, with a red warning indicator at 2%. Suitable for pitch sizes from 3/8” to 3”, it helps identify excessive wear early, enabling timely maintenance and consistent inspections across service teams.

Using the Chain Gauge

- Check the gauge jaws for damage and ensure they slide freely.
- Fully close the gauge and confirm the calibration window reads OK.
- Avoid exposing the gauge to excessive heat, which may affect accuracy.
- Align the red arrows with the centres of the chain pins.
- Check the top window for the chain pitch and number of pins to measure.
- If no reading appears, turn the gauge over and use the appropriate scale.
- Position the jaws on the pins and measure across the indicated number of pins.
- Measure the section of chain that runs over the roller, where wear is greatest.
- Read the chain wear percentage in the bottom window, accurate to 0.25%.

Every effort has been taken to ensure that the data listed in this catalogue is correct. Chain & Drives will not accept liability for any damage or loss caused as a result of the data in this catalogue.

Chain Lubrication

Lubrication
Sectional Drawings of chain links for roller chains and leaf chains clearly show that lubrications product must move forward a long way between narrow plate gaps in order to reach its most important goal, the chain link.

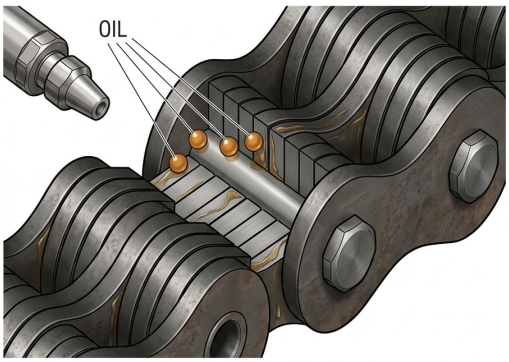

The further task of lubricating oil is to ensure an adequate protection from corrosion. This is achieved by moistening surfaces with an adequate film thickness.

Devices with lifting chains which are exposed outdoors to all weather conditions naturally require a slightly higher expenditure on servicing.

Type of Lubricant
A low-viscosity mineral, machine or motor oil and/or synthetic oil should always be used to ensure effective lubrication and minimise wear.

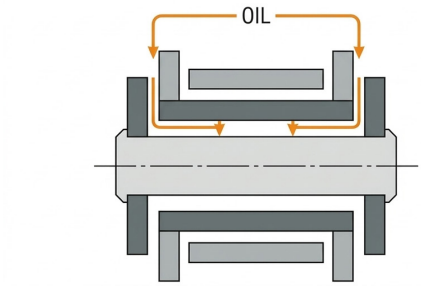

Viscosity
Viscosity of lubricating oil is to be selected in such a way that at all ambient temperatures it remains low viscosity. Under normal temperature conditions lubricating oils with a viscosity of SAE 20 to SAE40 (50 to 200mm2/s at 400C) are ok.

Use of Spray Cans
If a chain is being lubricated using a spray can, it must be ensured that the basic demand is met in which the following will occur: After evaporation of the thinner a viscosity must be achieved which corresponds to the above mentioned recommendation.

Lubricating Methods
The lubricating product can be applied by means of a brush, a paintbrush or with compressed air spray devices.

ChemTools Chain Lubricants

Our chain lubricant is supplied in accordance with manufacturers specifications and is recommended to be applied with all new chain installations. Chain & Drives are proud to stock our very own specialised chain lubricant; as well as additional stock for immediate delivery of your lubricant requirements.

Common Chain Defects

Elongation is not the only chain defect requiring immediate chain replacement. The majority of chain defects are the direct result of poor chain lubrication and maintenance. The following is a list of chain defects that would require immediate chain replacement. If any of these conditions are found in chain that are inspected, recommendations for immediate replacement should be given to the owner of the forklift.

Damage

Do The chain plates show impact markings or other deformation? This an indication of external damge taken on by the chain.

Surface Rust

It appears as discolouration on plates and pins and may indicate internal corrosion that can cause chain seizure. It forms small craters due to insufficient lubrication and can lead to premature fractures.

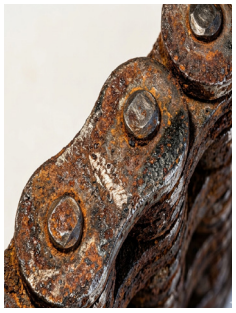

Stiff Links

If the chain links do not go back into stretched length after leaving the chain deflection wheel, the chain link is no longer functionally efficient. This phenomenon can be caused by cold welding or link corrosion.

Twisted Pins

Twisted pins are a sign of poor chain lubrication and severely stiff links, where the connection between the pins and outer plates has been compromised. They can be identified by rivet flattening that has shifted from its original factory position.

Loose Link Plates

Chains which show loosened pins in the force fit of the outer plates represent a direct danger. Pins loosened in force fit of outer plates are a direct consequence of “stiff links” and “twisted pins”.

Inadmissable External Wear

Inspect the chain plates for signs of external wear, particularly from continuous rubbing against mast components or contact with deflection rollers. Any wear identified must not exceed 5% of the original plate cross-section.

Broken Pins

Broken Pins occur as a rule mainly as a consequence of corrosion in the chain link. This corrosion leads to pitting on the pins. It, in turn is then the starting point for fatigue fractures (endurance failures).

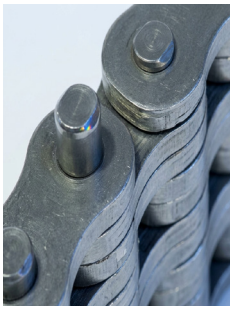

Broken Plates

It is to be examined whether plates of the chain show outer wear, e.g due to continuous rubbing on mast prts or in the contact area of the deflection rollers. The wear must no exceed 5% of the original plate cross-section.

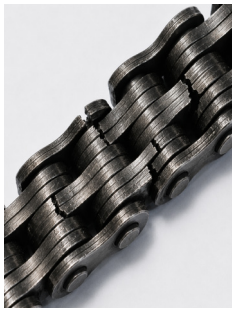

TransDrive+ Heavy Duty Leaf Chain with Zintek®

Chain and Drives are proud to announce the new TransDrive+ Heavy Duty Leaf Chain, complete with superior Zintek anti-corrosion coating.

This chain is developed for highly corrosive environments, the treatment is a specialised rust resistant component coating utilising nickel-chromium compounds and will prevent rust and premature failure caused by chain contamination.

The TransDrive+ Heavy Duty Leaf chain is available in all LL & BL chain series and only has a minimal increase in cost.

Automation **Agriculture** **Concrete & Construction** **Food & Beverage**
Industrial **Marine** **Mining & Heavy Industry** **Oil & Gas**
Recycling **Renewable Energy** **Transportation** **Wastewater Treatment**

CHAIN & DRIVES®

COMPLETE BEARINGS
& POWER TRANSMISSION

chainanddrives.com.au
support@chainanddrives.com.au

Sales & Accounts

1/45 Inspiration Drive
Wangara WA 6065
P +61 8 9303 4966
E admin@chainanddrives.com.au

Workshop & Engineering

22 Beneficial Way
Wangara WA 6065
P +61 8 6314 1100
E support@chainanddrives.com.au

Sales & Workshop

16/51-53 Kewdale Road
Welshpool WA 6106
P +61 8 6314 1155
E support@chainanddrives.com.au

Unit 3, 55 Collinsvale Street
Rocklea, QLD 4106, Australia
P +61 7 3059 9188
E salesqld@chainanddrives.com.au

7/70 Holbeche Road
Arndell Park NSW 2148
P +61 2 9674 8611
E salesnsw@chainanddrives.com.au

Chain & Drives Australia Pty Ltd • ABN 81 121 105 173 • EST. 2007

MEG MECHANICAL EQUIPMENT GROUP®